RBD Instruments, Inc.

Instruction Manual

3 kV Large Area Ion Source

manual revision 11/76

Contents:

1.1 Introduction:

The RBD 3 kV Large Area Sputter Ion Source is a high beam current, variable energy (100 to 3000eV) ion source for rapid cleaning of samples in UHV. It is commonly used as a source of Argon ions.
Low beam energies of less than 1000eV are used to clean sensitive samples such as single crystal surfaces. Higher beam energies allow for rapid sputter cleaning of other samples such as semiconductors and oxides.
The ions are created by an oscillating electron discharge inside a chamber at Ion Energy (kinetic energy) potential, there are two long life Tungsten filaments to give extended maintenance free use.
An extraction and focusing lens system is used to extract the ions from the discharge chamber and focus them into a broad (approx. 10mm) spot at the sample. The focus voltage can be varied to vary the beam current, diameter and profile.
The source is bakeable up to 200C under vacuum and is fully UHV compatible.

2.1 SAFETY

The use of warnings and cautions used in the manual is defined below:

WARNING
Warnings are given where failure to observe the instruction could result in injury or death to people.

CAUTION
Cautions are given where failure to observe the instruction could result in damage to the equipment, associated equipment or process.

WARNING CAUTION
The control unit has output voltages that are variable up to 3kV! Such voltages are potentially hazardous / lethal. It must only be used as described in the manual. Servicing of this unit should only be carried out by suitably qualified and supervised personnel. The 3 kV Ionn Source System should only be operated by suitably qualified personnel who have read the manual, fully understand the potential hazards and observe the procedures, warnings and cautions contained in the manual. The mechanics are designed solely for use inside a Stainless Steel / Aluminium ultra high vacuum (UHV) chamber.

If in doubt consult RBD Instruments, Inc.. about any aspects of safety, maintenance or operation.

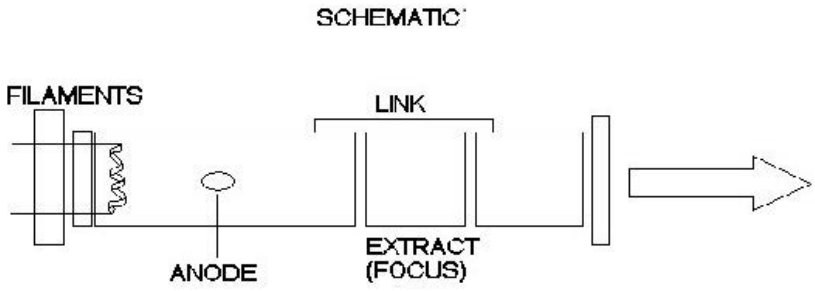

3.1 Technical Data

Control Unit

Dimensions:
19 inch rack case 483mm wide X 3U (133mm) high X 350mm deep

Mass 8.5 kg

Electrical supply: 115V AC or 240V AC factory preset
47 to 63Hz

Maximum Input Power 100VA

Mains electrical supply fuse 1A Anti-surge type T 20mm
fitted in rear panel IEC panel mount plug

Ambient operating temperature range +5C to +30C

Outputs:
Ion Energy supply variable 100 - 3000V DC (+/- 5%) used as pedestal voltage for Filament and Anode supply outputs.
Filament supply 12V DC variable 0-3A, floating on Ion Energy Supply.
Anode supply variable +50V to +85V DC 60mA maximum, floating on Ion Energy supply.
Focus/Extract supply variable 0-100% of Ion Energy supply setting.
refer to *Figure 2* for relevant output at cable end socket.

EMC Directive standards : EN61326-1 2013
LVD Directive standards: EN61010-1

Mechanical assembly

UHV compatible construction

Mass 0.6 kg

Dimensions: See outline drawing

Mounting flange: 70mm OD CF
Gas inlet flange: 34mm OD CF
Maximum bakeout temperature: 200C

4.1 Unpacking and Installation:

Mechanics, cabling and electronics are shipped in one carton containing the following parts:

One control unit with integral output cable.
One mechanical assembly in protective box.
One spare filament assembly
One mains input IEC cable
One Instruction manual
(Optional) One flanged adapter collar to give the correct working distance for your vacuum chamber.

4.2 Control Unit.

Check for any visible damage to the Control Unit. If any damage is seen or suspected do not use the unit. Contact RBD Instruments, Inc. to arrange repair and re-test under warranty.
The Control Unit and Ion Source are designed for use in a laboratory environment. The control unit is a standard 19-inch laboratory rack case, 3U (133mm) high by 483mm wide and 350mm deep. We recommend that it is housed in an earthed standard 19-inch laboratory rack.

CAUTION

Airflow must not be restricted above the ventilated top lid, leave a minimum 10mm clearance above the unit.
Do not obstruct the cooling fan on the rear panel; leave a minimum 150mm clearance to the rear of the unit for cabling and ventilation.
Enclosed racks should be fitted with cooling fans.
If the Control Unit is not housed in a laboratory rack ensure that it is securely sited away from the possibility of water or chemical spillage. Do not allow small items to fall through the ventilated top lid. High Voltages are present inside the unit, do not allow conductive items such as wire, tools etc. to enter the unit through the ventilated lid. Do not allow the ventilated lid to be covered by papers, books or other items including other electronic units, which would restrict the flow of air over the unit.

WARNING
The Control Unit contains electrolytic capacitors, which under certain fault conditions may emit dangerous fumes. Ensure that the Control Unit is operated in a well-ventilated area.

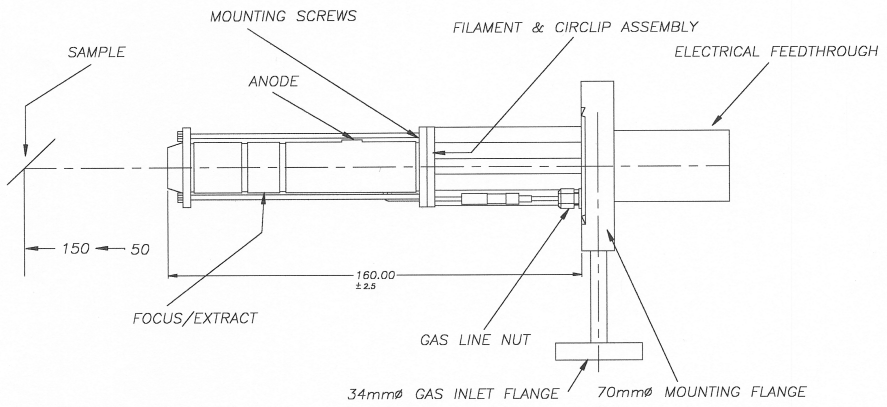

OUTLINE DRAWING

4.3 The ion source mechanics are shipped in a protective box with a spare twin filament assembly. Visually inspect the unit for transit damage, check that there are no loose nuts, wires or connectors and that the assembly is rigidly mounted on its flange. The source is cleaned, leak checked, baked and tested prior to shipment, all internal parts should only be touched with clean tools, polythene gloved hands and in a dust free environment. The source mounts on a 38mm bore, 70mm o/d. conflat* flanged port facing the sample surface. The working distance is 50-150mm from the sample (100mm optimum). This corresponds to a flange to sample distance of 210 to 310mm. Optimum cleaning is given with the sample surface angled up to 45 degrees to the incident beam.
The ion source should be bolted to the flange using a new clean copper gasket. **conflat is a registered trademark of Varian Associates*

5.1 Checks to be Made Prior to First Use:
After bolting the source to the system check the following resistance at the vacuum electrical feedthrough using a multimeter: (see diagram “12 way feedthrough”)

Filament 1 to Filament common: less than 2 Ohms
Filament 2 to Filament common: less than 2 Ohms
Filament common to Anode: Greater than 100 kiloOhms
Filament Common to Focus: Greater than 10 MegOhms
Check that the resistance from each of the pins of the feedthrough to the vacuum system (earth) is greater than 10 Megohms. If any of the resistances does not match those above refer to the **maintenance guide**.

6.1 Argon Gas Line:

A UHV compatible leak valve with a 34mm o/d. outlet flange should be connected to the source's gas inlet flange. A configuration for bakeable gas lines and manifold is given in Figure 1.

The source should be pumped and baked (see "Bakeout" instructions) prior to operation, the gas lines and manifold should also be pumped and baked before use and flushed twice with Argon from the manifold to ensure that pure Argon is leaked into the source. Argon contaminated with air will give an unstable discharge and will shorten filament lifetime considerably.

Figure 1

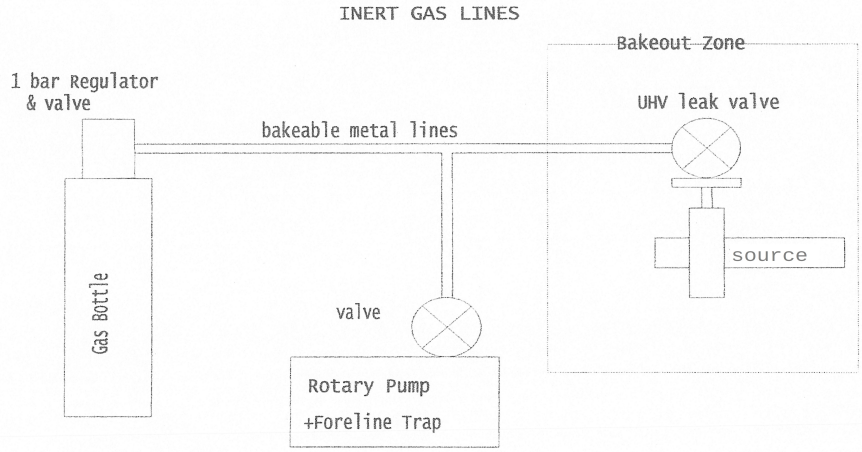

7.1 Electrical Connections:

WARNING
Power should only be applied to the control unit once the mechanics are correctly installed in a chamber under UHV and the cabling correctly made between the control unit and mechanics. The Control Unit, ion source, vacuum chamber and support frame / bench must be connected to a good common safety earthing point.

The ion source is connected via a 12 way vacuum electrical feedthrough to the following elements:

See diagram “12 way feedthrough”

Filament common

Filament 1

Filament 2

Anode

Focus/Extract

The source electrical feedthrough connects to the control unit with one multiway cable from the rear panel of the control unit to a 12-way socket at the feedthrough. The eyelet connector of the earth wire at the socket end of the cable should be securely fastened to a bolt at the source mounting flange using an M6 nut.

WARNING
The multiway cable between the control unit and the vacuum electrical feedthrough carries voltages of up to 3000 Volts. No attempt should be made to dismantle or modify the cable/connectors in any way. The cable should be routed through suitable conduit between the control unit and ion source. The cable should not be allowed to run along the floor or any route where it may be crushed, cut, or similarly damaged. The cable should not be exposed to water, chemicals or temperatures outside the operating specification of the control unit.

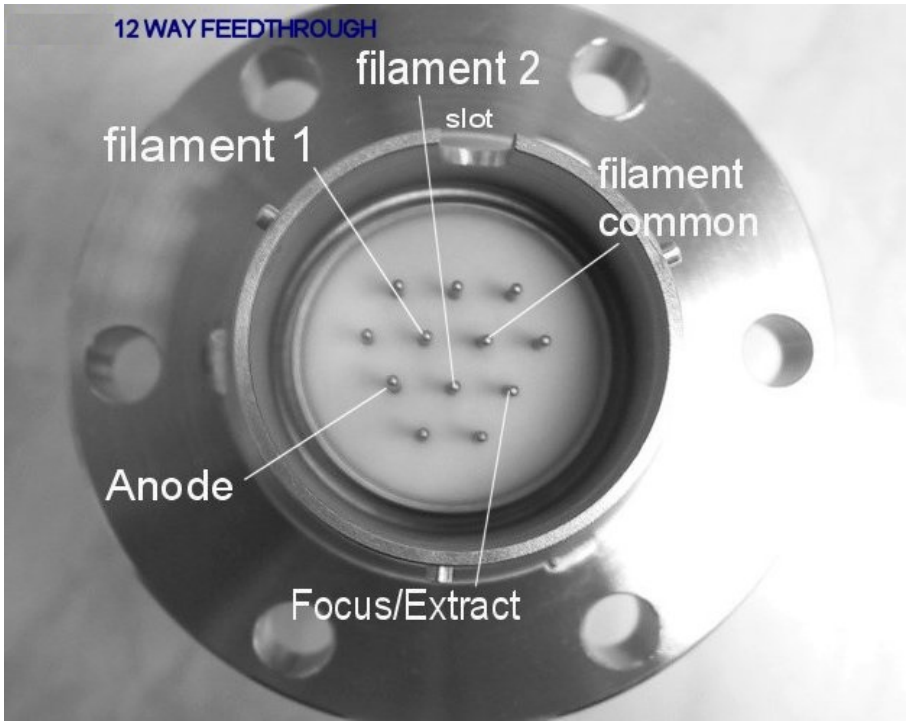

-

7.2 Electrical Supply:

CAUTION
The electronics are shipped with the mains input voltage configured for your mains electrical supply. A label near the mains input rear panel mounted IEC plug indicates the mains input voltage. Check that the input voltage is the same as your electrical supply.

WARNING
High Voltages exist in the control unit and cables whilst operating. Ensure that the control unit is earthed and observe all appropriate precautions for safe installation and handling of electrical equipment.

Use the mains IEC cable provided for connection to a suitably rated and fused electrical supply.
Ensure that the front panel switch labeled POWER is in the off position prior to connection to the electrical supply:
POWER switch OFF position - Red Button not depressed, not illuminated.
POWER switch ON position - Red Button depressed flush with panel, illuminated only when connected to mains electrical supply.

If the supplied plug is not used the wires of the mains IEC cable should be connected by a qualified technician as follows:

Wire Colour	**Use**
Green / Yellow	Earth (Ground)
Brown	Live (Line)
Blue	Neutral

7.3 Additional Earth Bonding (if required)
If no safety earth bonding is made by the mains IEC cable or if it is determined that the earth connection is of too high an impedance to safely bond the Control Unit to earth then additional earth bonding is required:
The rear panel stud labelled with the earthing point symbol and "SAFETY GROUND" "SAFETY EARTH" should be low impedance bonded with a suitable heavy duty braid or cable to earth.

8.1 Bakeout:

Ensure POWER switch is in OFF position. Disconnect the Control Unit from the mains supply.

CAUTION
The multiway cable is not bakeable. Disconnect the multiway cable from the vacuum electrical feedthrough and remove from the bakeout zone.

Pump out and leak check the pumping system and 3 kV source.

Cover the feedthrough with Aluminium baking foil.
Pump out the gas lines up to the leak valve. Refer to manufacturers instructions for leak valve bakeout and other system components bakeout.
The source can now be baked under vacuum along with rest of the system at up to 200C. Temperature regulation and pressure trips are recommended for unattended bakeout.

9.1 Operation:

Step 1. Flush out and fill the gas lines with pure Argon (see "Argon Gas Line")

Step 2. Ensure chamber pressure is less than 1 x 10-8 mbar.

Step 3. Earth the sample or connect to earth through the supplied microammeter to allow monitoring of sample current. Switch the microammeter to IONS metering.

WARNING
NEVER CONNECT A METER TO AN ISOLATED SAMPLE AFTER THE HAS BEEN TURNED ON BECAUSE THE SAMPLE WILL BE CHARGED WITH IONS AT THE ION ENERGY POTENTIAL. THIS MAY RESULT IN DAMAGE TO THE METER OR AN ELECTRICAL SHOCK TO YOU!

Step 4. Align the sample as accurately as possible in front of the source at a working distance of approx. 100mm (50-150mm)

Step 5. Connect the source to control unit. There is a single multiway cable between control unit rear panel and source electrical feedthrough.

Step 6. **With all front panel control unit potentiometers set at zero**, power on the control unit by depressing the front panel **POWER** switch which illuminates when on.

Step 7.
Set ANODE potentiometer dial to 5.0 (50%).
Select either filament FIL 1 or FIL 2.
Monitor the vacuum system UHV pressure gauge.
Gradually open the leak valve allowing Argon into the source until the chamber pressure is approx 8 x 10e-6 mbar.

Step 8. .
Select filament current metering (FIL). Turn FILAMENT potentiometer slowly over 2-3 minutes to give Filament current ~2.0A
Switch metering to ANODE (discharge current).

Step 9.
Increase Filament Current dial until discharge strikes,
For a new W filament this will be at approx 2.6-2.7A.
For a new Yttria coated W filament this will be at approx. 2.2-2.4A .
Regulate the filament current to give 30 to 40mA discharge current.
If the discharge does not strike reduce filament current to 2.0A, increase Argon chamber pressure in chamber slightly (e.g. to 1 x 10e-5mbar) and repeat step 9.

(If no discharge is obtained see 12.1 <u>Yttria coated Filament Reactivation)</u>

Step 10.
Set an ION ENERGY of 500eV (0.5 kV on the ion energy meter).
Gradually decrease the pressure of Argon in the chamber by slowly closing the leak valve. Regulate filament current to maintain 30-40mA discharge. Sample current should now be seen (a few microamps). Monitor the chamber pressure and sample current. As the pressure is slowly decreased the sample current will increase, reach a maximum and then decrease. Note the pressure at which the sample current is maximum or the pressure at which the discharge current decreases / fails. **This is the optimum operating pressure and should be noted for future reference and quicker operation.**

Step 11. Lower the Anode dial setting whilst monitoring the discharge current, initially this will have no effect then the discharge will be seen to decrease, regulate at between 30 to 40mA using the anode dial, at this setting the discharge is "discharge current limited" and the ion source will operate with a stable discharge and may be left to clean a sample unattended.

Step 12. Optimise sample current with FOCUS dial setting. The optimum FOCUS potentiometer dial setting will vary as the ION ENERGY is varied. Vary the ION ENERGY dial to give desired beam energy and re-optimise focus for highest sample current.
For general purpose uniform cleaning of a 10mm or so diameter sample leave the focus potential at the value which gives best sample current.
For a smaller spot increase the focus voltage: the spot size and also the sample current will decrease.

Step 13. Monitor sample current, optimise sample position for maximum current, angle the sample up to 45 degrees for optimum sputtering. The length of time required to clean the sample is a function of many factors including beam current and beam energy, sample sputter yield and initial surface cleanliness. Consult the scientific literature and monitor the surface cleanliness using analytical techniques.

Example approximate sputtering rates are ;

Ag : 27 – 60 Angstroms / min (0.5 – 2kV beam energy)
W : 5 - 12 Angstroms / min (0.5 – 2kV beam energy)

for an Ar+ ion beam with a beam current density of ~15microAmps per square cm and normal incidence.

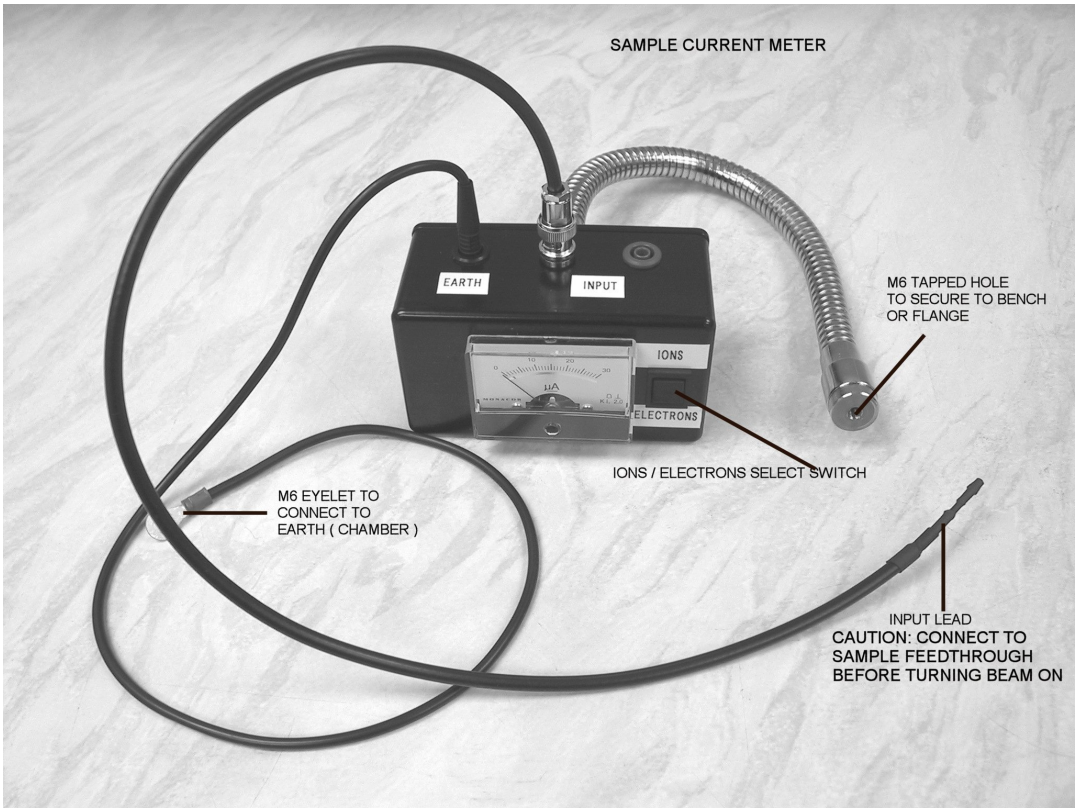

9.2 Turning off the 3 kV Large Area Ion Sputter System:

Reduce ION ENERGY, FOCUS, FILAMENT potentiometer dials to zero, switch filament to OFF.
Switch the front panel POWER switch off.
Close leak valve.

10.1 Typical operating characteristics:

(Pressures are dependant on the pumping speed in the chamber)
Chamber operating pressure: 2x10-6 to 1x10-5 mbar
Initial Discharge lighting pressure: Approx. 5 x10-6 to 2x10-5 mbar
Discharge current 30-40mA
Spot size :~10mm at optimum current Focus setting .
Anode : 40-60%
Sample Current: Approx. 10 to 20 microamps

11 Maintenance:

WARNING
To avoid the risk of contact with hot internal parts of the ion source mechanics allow one hours cooling of the source between last operation and venting of the vacuum system.

11.1 Filament replacement:

The 3 kV Large Area Ion Sputter System will give extensive periods of maintenance free operation if operated in good vacuum using a pure Argon supply FREE OF OXYGEN (air). There are two filaments , once one has become open circuit (through extensive use or exposure to oxygen whilst operating) then switch to the second filament and resume use. Once both filaments have failed replace as follows:

WARNING \ CAUTION
Step 1. Close leak valve, switch POWER off at controller and disconnect both the mains supply cable and the multiway cable.

Step2. Vent the vacuum chamber to dry nitrogen (consult vacuum system manufacturers manuals)
Unbolt and remove leak valve and ion source.
Step 3. Transfer the ion source to a dust free environment. Use clean tools, polythene gloves i.e. standard UHV practice whilst working on the source.

Step 4. Disconnect the five gold push on connectors at the feedthrough (filament, anode and focus).

REFER TO OUTLINE DRAWING

Step 5. Disconnect the Gas Line Nut from the 70mm o/d. CF Mounting flange.

Step 6. Remove the three 'Mounting Screws' and remove the complete assembly from the vacuum electrical feedthrough flange.

Step 7. Use a pair of tweezers or suitable pliers to squeeze and remove the circlip holding the filament assembly in place. The filament assembly can now be removed.

Step 8. Replace with a new filament assembly.

Step 9. **Re-assembly** is the reverse procedure - however, the GAS LINE NUT DOES NOT NEED TO BE VERY TIGHT, DO NOT OVERTIGHTEN DURING REASSEMBLY. Reconnect the filament, anode and focus elements according to the section "Electrical connections". Re-install on the vacuum chamber with new clean copper gaskets.
Check resistance at the vacuum electrical feedthrough as in section 5.1 page 6.
After pumpdown and bakeout outgas the new filaments slowly up to 2.6A (W) or 2.2A (Yttria/W) for 10 mins each with no Ar gas.

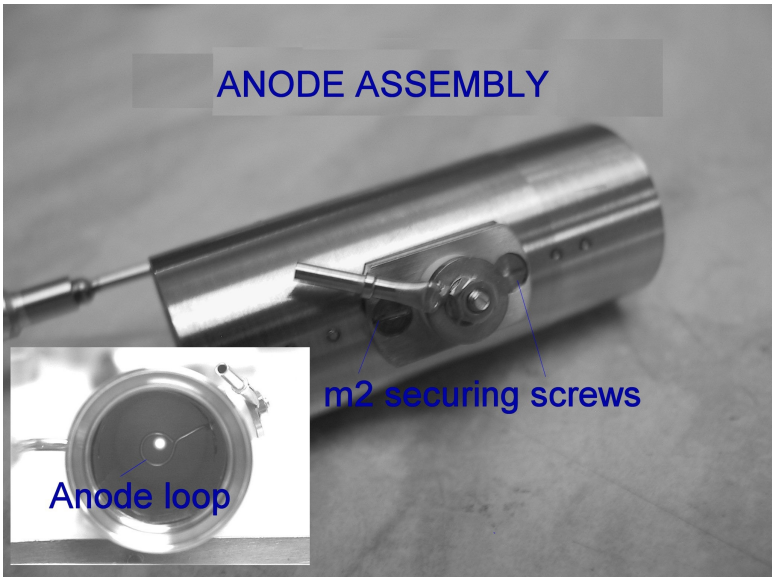

12.1 Trouble Shooting:

Problem: No discharge current obtainable.
Action: Disconnect the control unit from the mains electrical supply and remove multiway cable connector at vacuum electrical feedthrough.
Check the following resistance at feedthrough: Refer to pages 8,9.
Filament resistance should be ~1-2 Ohm
Check Anode to filament common resistance is greater than 50 kiloOhms.
If the above is OK try again with higher gas pressure and/or higher filament current.
If still no discharge check all fuses inside control unit especially FS2 63mA. Replace if open circuit. Finally; replace TIP121 transistor adjacent to Anode potentiometer on circuit board, this transistor is mounted in a socket and can be removed without desoldering, replace with a new TIP121 taking care to replace in the correct orientation.

Yttria coated Filament Reactivation
Follow this procedure if you cannot obtain a discharge at normal filament currents.

Close the leak valve to the source I.e do not leak Ar into the source

Increase the filament current to 2.5A and leave for ~ten minutes. Decrease to 2.2A.

Set anode potentiometer at 50%

Set the Argon pressure at it's normal lighting pressure for your chamber (usually ~8x10e-6mbar to 2x 10e-5mbar)
If the discharge does not light immediately try gradually increasing the filament current (up to 2.6A max).
If discharge still does not light also increase the Argon pressure (up to max 5 x10e-5 max)

Once the discharge lights you can reduce the Ar pressure to the lowest value forstable discharge (usually between 2 and 5 x 10e-6 mbar)
You can then gradually reduce the filament current, asthe filament coating reactivates you should be able to reduce to ~2.0A -2.2A for 30-40mA discharge.

You can now set the required beamenergy, adjust focuswhilst monitoring sample curr (when focusisoptimised the sample current isusually 12-15 microAmps)

Problem: Current on discharge current meter when no filament current on or no gas being supplied.
Action: Disconnect the control unit from the mains electrical supply and remove multiway cable connector at vacuum electrical feedthrough.
At the vacuumelectrical feedthrough checkforlow resistance of Anode to Filament common. The anode isolation ceramicsinside the source should be replaced if the resistance islessthan 50kOhms. The anode assembly is easily accessible byremoving the two countersunkm2 screws which hold the anode assemblyto the discharge chamb (see photo above)

Problem: Discharge obtained but very low sample current.
Action: Check that ION ENERGY and FOCUS is set correctly. Check that sample is aligned with the source.

Problem: Unstable discharge or Filaments blowing frequently
Action: Checkpurity of Argon supply using a Quadrupole Mass Spectrometerin the chamber, ensure that there isno mass32 (Oxygen) appearing in the RGA spectrum.
Pump and flush gaslinesagain if Oxygen ispresent.

IF YOU EXPERIENCE ANY FAULTS OR HAVE ANY PROBLEM WHICH CANNOT BE RESOLVED USING THIS MANUAL PLEASE CONTACT RBD AND WE WILL BE PLEASED TO BE OF ASSISTANCE:

Phone: 541-330-0723 x311

Web: https://rbdinstruments.com/technical-support.html

13.1 Disposal:

WARNING Do not incinerate the control unit, incineration could cause injury to people

Dispose of the control unit, source and any components in accordance with all local and national safety and environmental requirements

WARNING Work will only be carried out on units which have not been contaminated by exposure to dangerous substances. Exposure to any such substance must be notified to RBD Instruments, Inc. prior to despatch for repair.