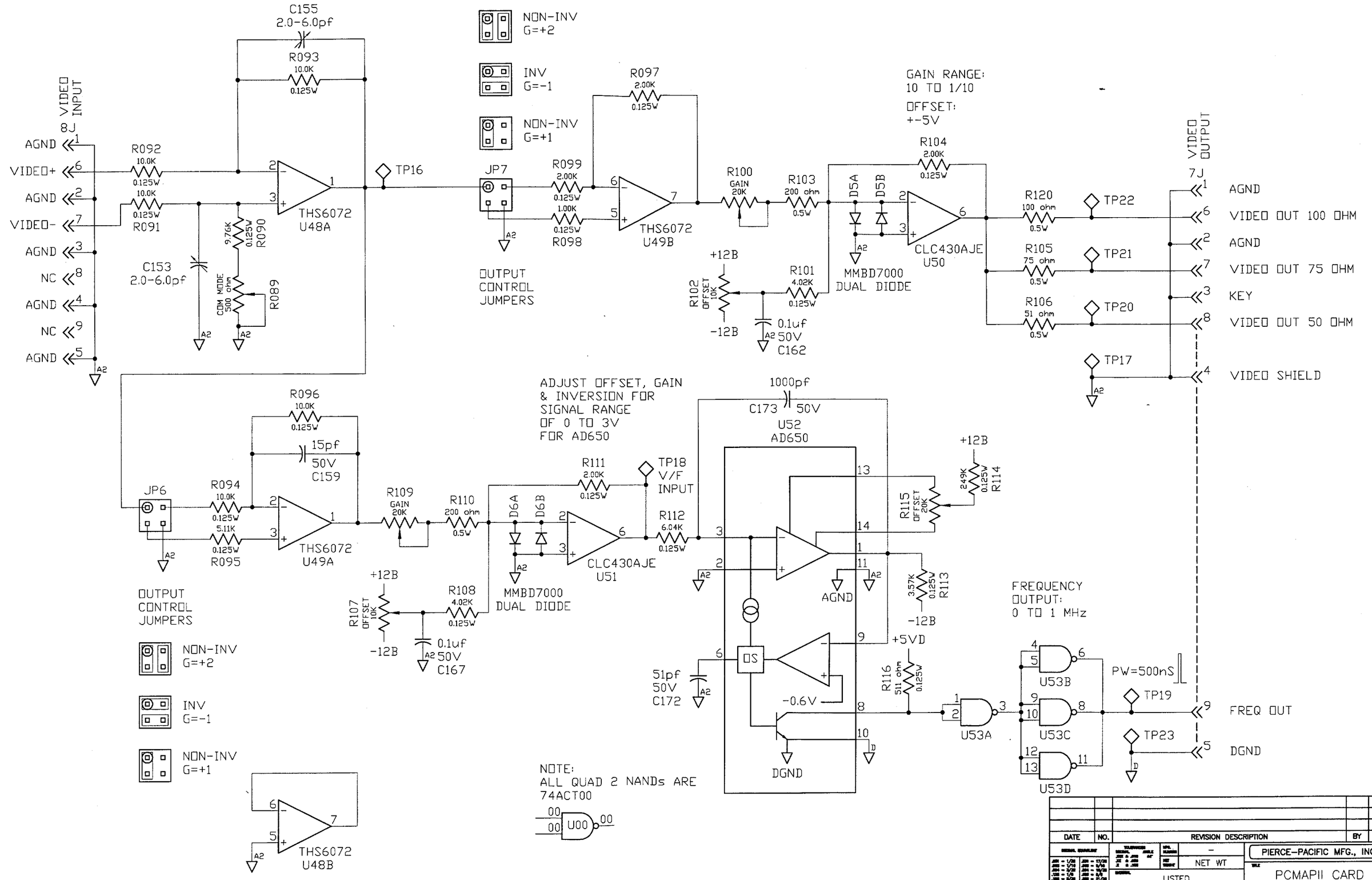

SCHEMATIC AS RENDERED ON THE TOPOLOGY

DATE	NO.	REVISION DESCRIPTION	BY	ECN

PIERCE-PACIFIC MFG., INC.

NET WT

LISTED

PCMAPII CARD VIDEO BUFFER SCHEMATIC

D | MAP20004P | –

NONE | 11-18-01 | JPR