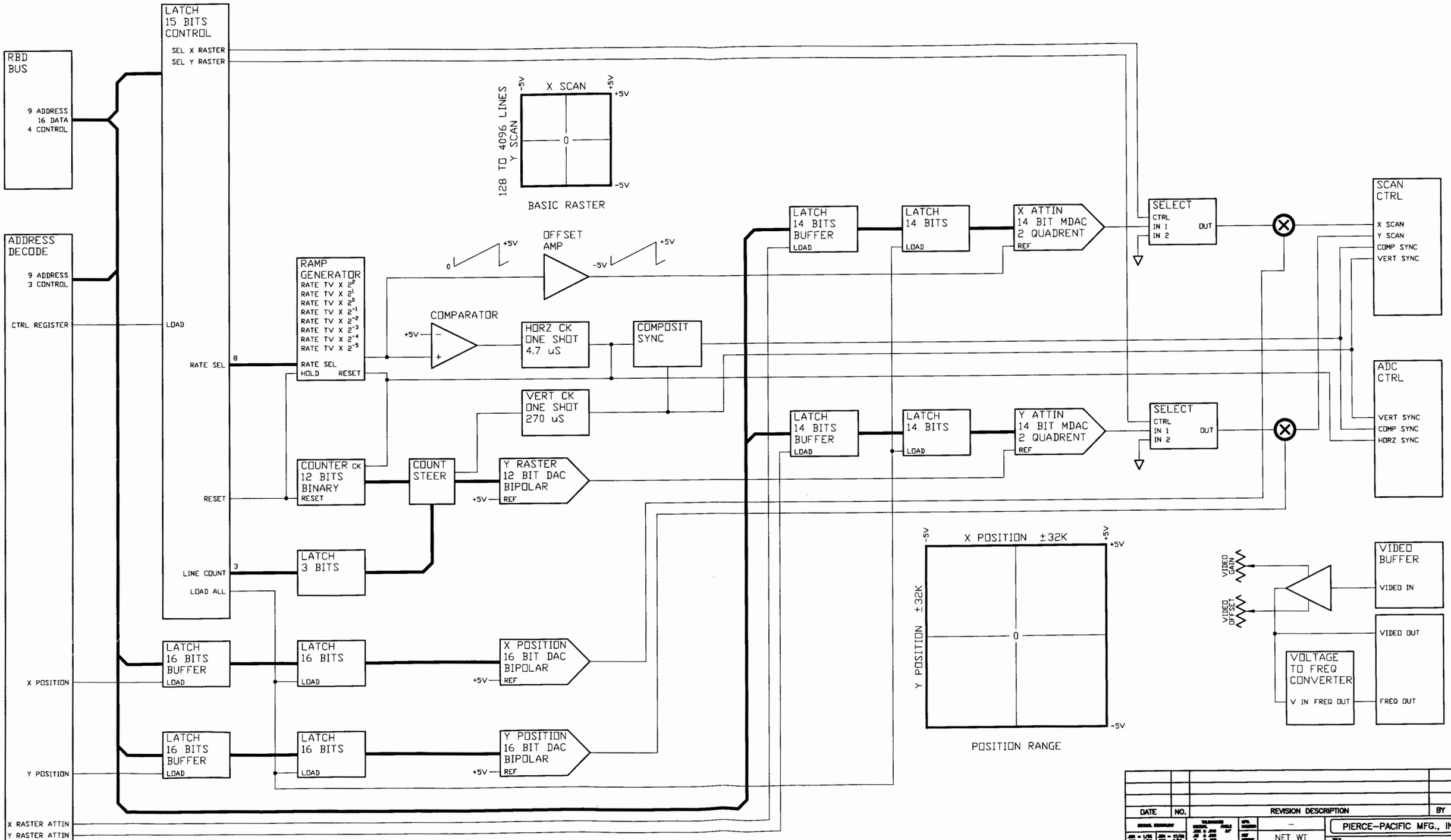

DATE	NO.	REVISION DESCRIPTION	BY	EC

PIERCE–PACIFIC MFG., INC.

NET WT

LISTED

PCMAP II CARD
X–Y SCAN CONTROL
BLOCK DIAGRAM

SIZE D | MAP20000

SCALE NONE | DATE 2–3–01 | DRAWN JPR

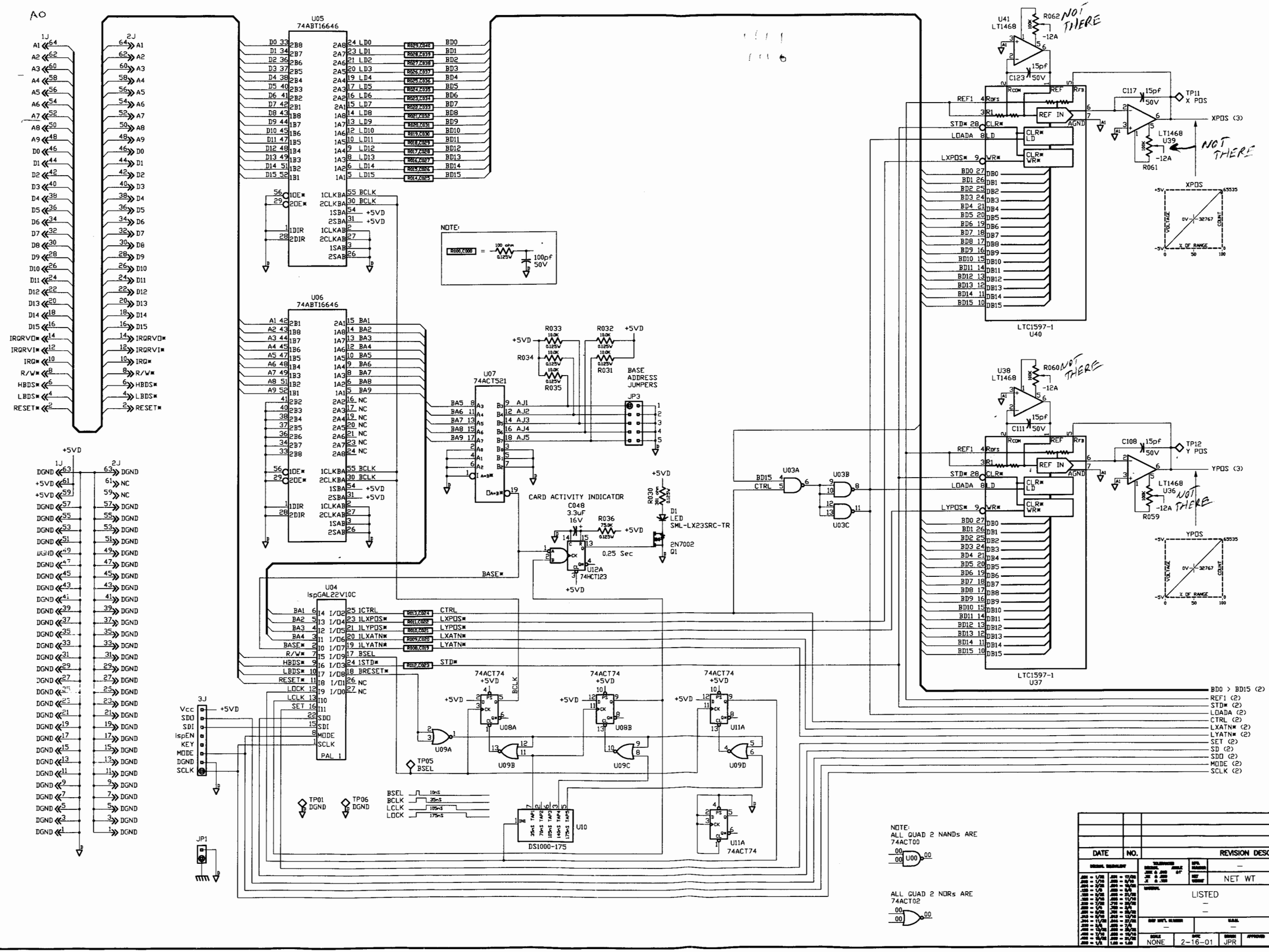

DATE	NO.	REVISION DESCRIPTION	BY	ECN

PIERCE-PACIFIC MFG., INC.

TITLE: PCMAPII CARD X-Y SCAN CONTROL SCHEMATIC

SIZE D	DRAWING/PART NUMBER MAP20001	REVISION —	
SCALE NONE	DATE 2-16-01	DRAWN JPR	APPROVED

NET WT

LISTED
—
—

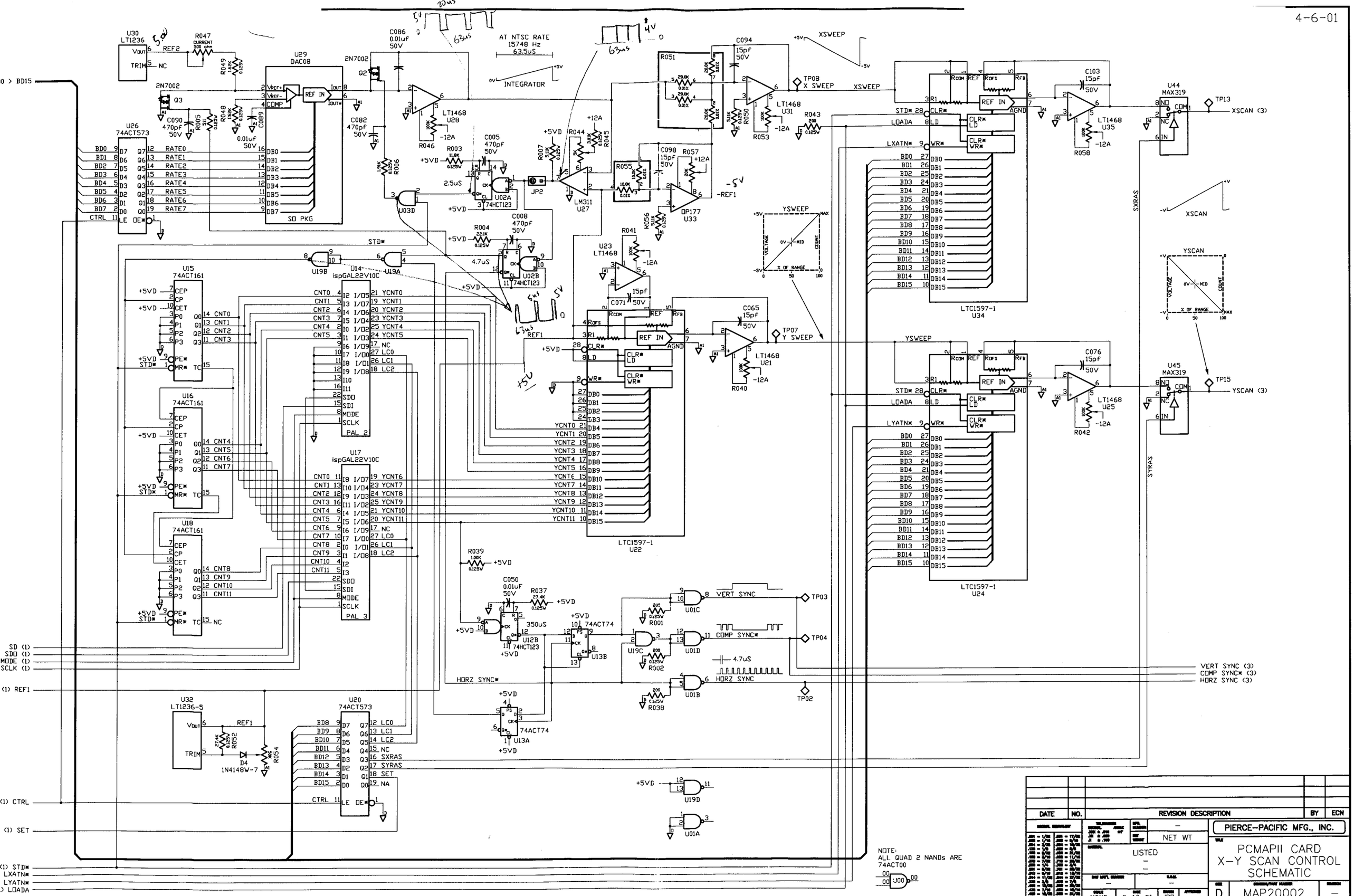
U30 LT1236
R047 CURRENT 500 ohm
U29 DAC08
U26 74ACT573
SO PKG
C086 0.01uf 50V
2N7002
Q2
Q3
C090 470pf 50V
C089 0.01uf 50V
C082 470pf 50V
AT NTSC RATE 15748 Hz 63.5uS
INTEGRATOR
LT1468 U28
R046 100K -12A
R003 11.8K
C005 470pf 50V
2.5uS
U02A 74HCT123
JP2
R007 3.3K
R044 3.01K
R045
LM311 U27
C008 470pf 50V
R004 22.1K
4.7uS
U02B 74HCT123
U03D
U19B
U19A
U14 ispGAL22V10C
PAL 2
U15 74ACT161
U16 74ACT161
U17 ispGAL22V10C
PAL 3
U18 74ACT161
U23 LT1468
R041 100K -12A
C071 15pf 50V
LTC1597-1 U22
C065 15pf 50V
TP07 Y SWEEP
LT1468 U21
R040 100K -12A
C094 15pf 50V
TP08 X SWEEP
XSWEEP
LT1468 U31
R053 100K -12A
R051
R050 5.11K
R055 10.0K
C098 15pf 50V
R057 20K
OP177 U33
-REF1
R056 5.11K
R043 200
YSWEEP
LTC1597-1 U34
LTC1597-1 U24
C103 15pf 50V
LT1468 U35
R058 100K -12A
C076 15pf 50V
LT1468 U25
R042 100K -12A
U44 MAX319
U45 MAX319
TP13
XSCAN (3)
TP15
YSCAN (3)
SXRAS
SYRAS
XSCAN
YSCAN
VOLTAGE
COUNT
% OF RANGE
MID
MAX
R039 1.00K
C050 0.01uF 50V
R037 27.4K
350uS
U12B 74HCT123
U13B 74ACT74
U13A 74ACT74
HORZ SYNC*
VERT SYNC
COMP SYNC*
HORZ SYNC
U01C
U01D
U01B
U19C
R001 200
R002 200
R038 200
TP03
TP04
TP02
U19D
U01A
U32 LT1236-5
R052 27.4K
D4 1N4148W-7
R054 30K
U20 74ACT573
SD (1)
SDO (1)
MODE (1)
SCLK (1)
(1) REF1
(1) CTRL
(1) SET
(1) STD*
LXATN*
LYATN*
LOADA
VERT SYNC (3)
COMP SYNC* (3)
HORZ SYNC (3)
NOTE:
ALL QUAD 2 NANDs ARE 74ACT00
U00
DATE
NO.
REVISION DESCRIPTION
BY
ECN
PIERCE-PACIFIC MFG., INC.
NET WT
LISTED
PCMAPII CARD
X-Y SCAN CONTROL
SCHEMATIC
D
MAP20002
NONE
2-16-01
JPR

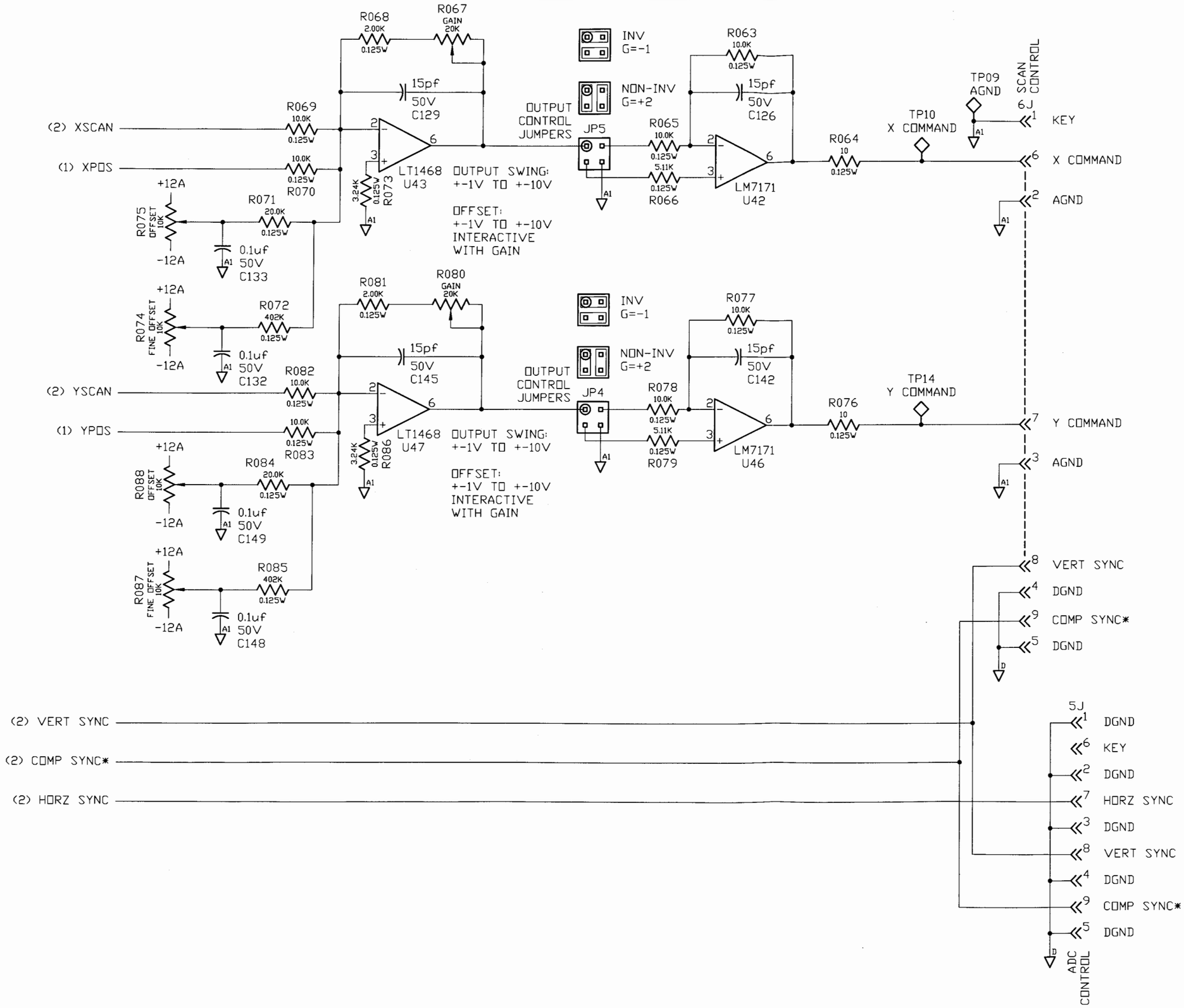

DATE	NO.	REVISION DESCRIPTION	BY	ECN

PIERCE-PACIFIC MFG., INC.

PCMAPII CARD
X-Y SCAN CONTROL
SCHEMATIC

NET WT

LISTED

SIZE D | MAP20003 | REVISION —

SCALE NONE | DATE 2-16-01 | DRAWN JPR

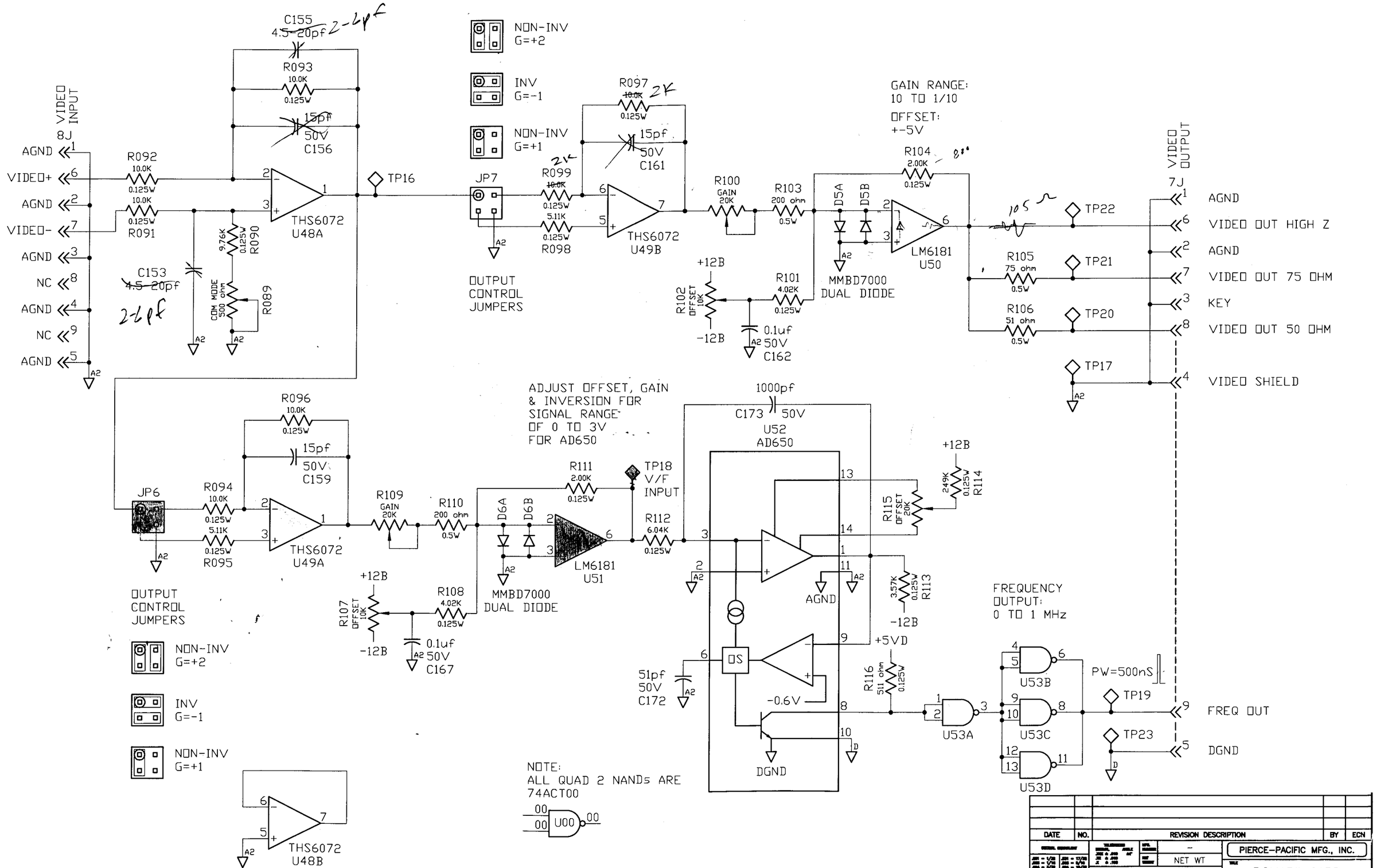

DATE	NO.	REVISION DESCRIPTION	BY	ECN

PIERCE-PACIFIC MFG., INC.

PCMAPII CARD
VIDEO BUFFER
SCHEMATIC

NET WT
LISTED

SCALE NONE | DATE 2-16-01 | DRAWN JPR | D | MAP20004 | —

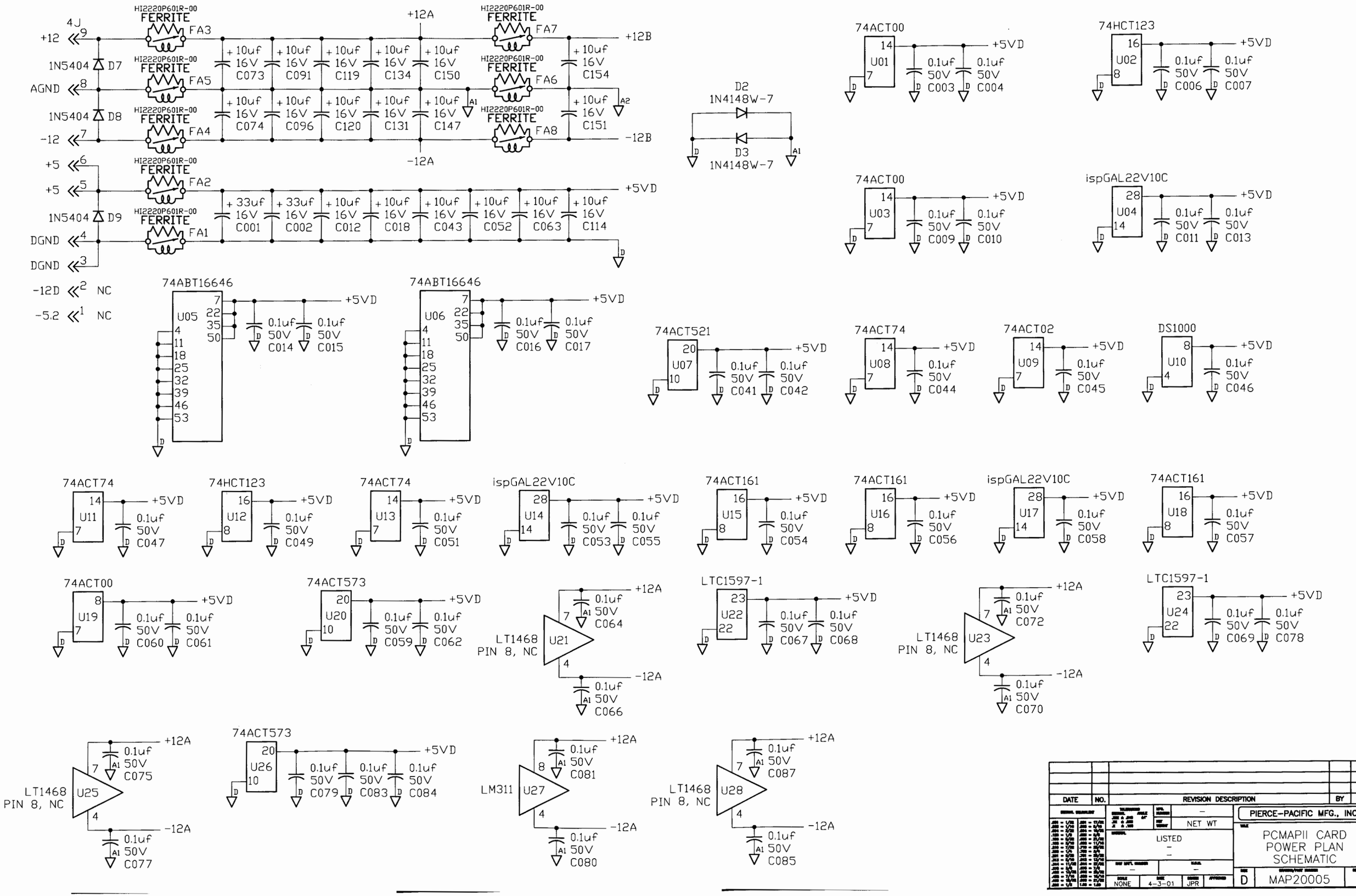
4J
+12
AGND
-12
+5
DGND
-12D
-5.2
NC
1N5404 D7
1N5404 D8
1N5404 D9
HI2220P601R-00 FERRITE FA1
HI2220P601R-00 FERRITE FA2
HI2220P601R-00 FERRITE FA3
HI2220P601R-00 FERRITE FA4
HI2220P601R-00 FERRITE FA5
HI2220P601R-00 FERRITE FA6
HI2220P601R-00 FERRITE FA7
HI2220P601R-00 FERRITE FA8
+12A
-12A
+12B
-12B
+5VD
10uf 16V C073 C091 C119 C134 C150 C154
10uf 16V C074 C096 C120 C131 C147 C151
33uf 16V C001 C002
10uf 16V C012 C018 C043 C052 C063 C114
D2 1N4148W-7
D3 1N4148W-7
74ACT00 U01 0.1uf 50V C003 C004
74HCT123 U02 0.1uf 50V C006 C007
74ACT00 U03 0.1uf 50V C009 C010
ispGAL22V10C U04 0.1uf 50V C011 C013
74ABT16646 U05 0.1uf 50V C014 C015
74ABT16646 U06 0.1uf 50V C016 C017
74ACT521 U07 0.1uf 50V C041 C042
74ACT74 U08 0.1uf 50V C044
74ACT02 U09 0.1uf 50V C045
DS1000 U10 0.1uf 50V C046
74ACT74 U11 0.1uf 50V C047
74HCT123 U12 0.1uf 50V C049
74ACT74 U13 0.1uf 50V C051
ispGAL22V10C U14 0.1uf 50V C053 C055
74ACT161 U15 0.1uf 50V C054
74ACT161 U16 0.1uf 50V C056
ispGAL22V10C U17 0.1uf 50V C058
74ACT161 U18 0.1uf 50V C057
74ACT00 U19 0.1uf 50V C060 C061
74ACT573 U20 0.1uf 50V C059 C062
LT1468 PIN 8, NC U21 0.1uf 50V C064 C066
LTC1597-1 U22 0.1uf 50V C067 C068
LT1468 PIN 8, NC U23 0.1uf 50V C072 C070
LTC1597-1 U24 0.1uf 50V C069 C078
LT1468 PIN 8, NC U25 0.1uf 50V C075 C077
74ACT573 U26 0.1uf 50V C079 C083 C084
LM311 U27 0.1uf 50V C081 C080
LT1468 PIN 8, NC U28 0.1uf 50V C087 C085
DATE
NO.
REVISION DESCRIPTION
BY
ECN
NET WT
LISTED
PIERCE-PACIFIC MFG., INC.
PCMAPII CARD
POWER PLAN
SCHEMATIC
NONE
4-3-01
JPR
D
MAP20005

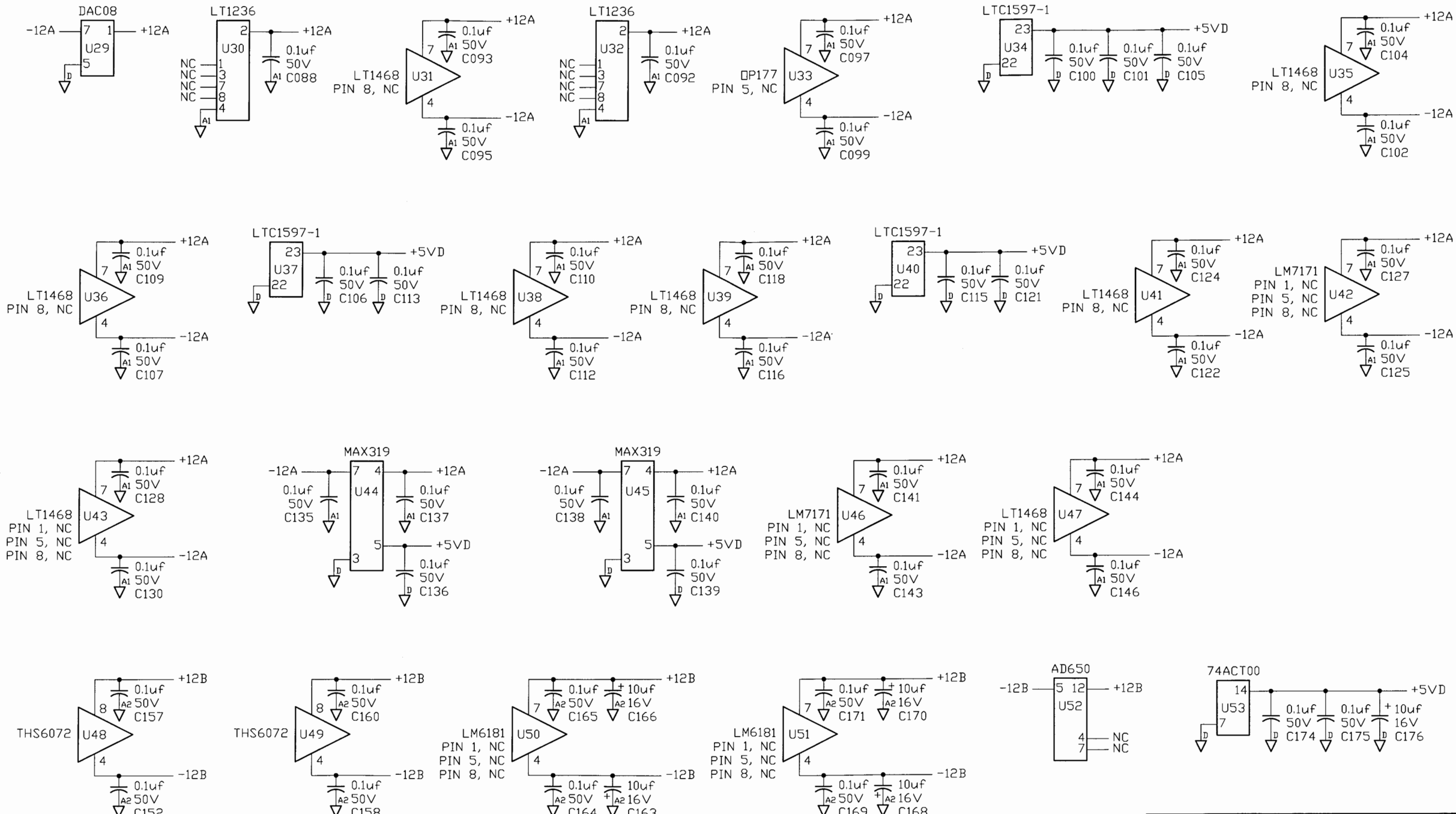

DATE	NO.	REVISION DESCRIPTION	BY	ECN

PIERCE-PACIFIC MFG., INC.

NET WT

LISTED

PCMAPII CARD
POWER PLAN
SCHEMATIC

SIZE	DRAWING/PART NUMBER	REVISION
D	MAP20006	–

SCALE NONE | DATE 4-3-01 | DRAWN JPR | APPROVED

COMPONENT

TEXT

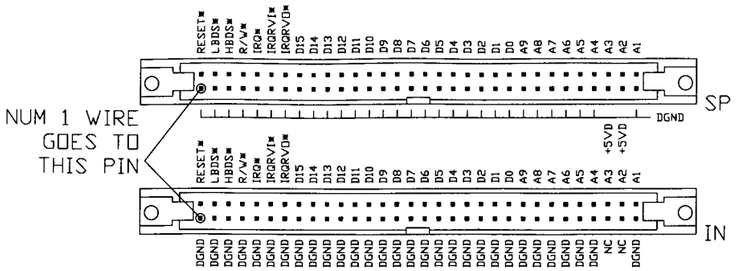

COMPONENT

TEXT

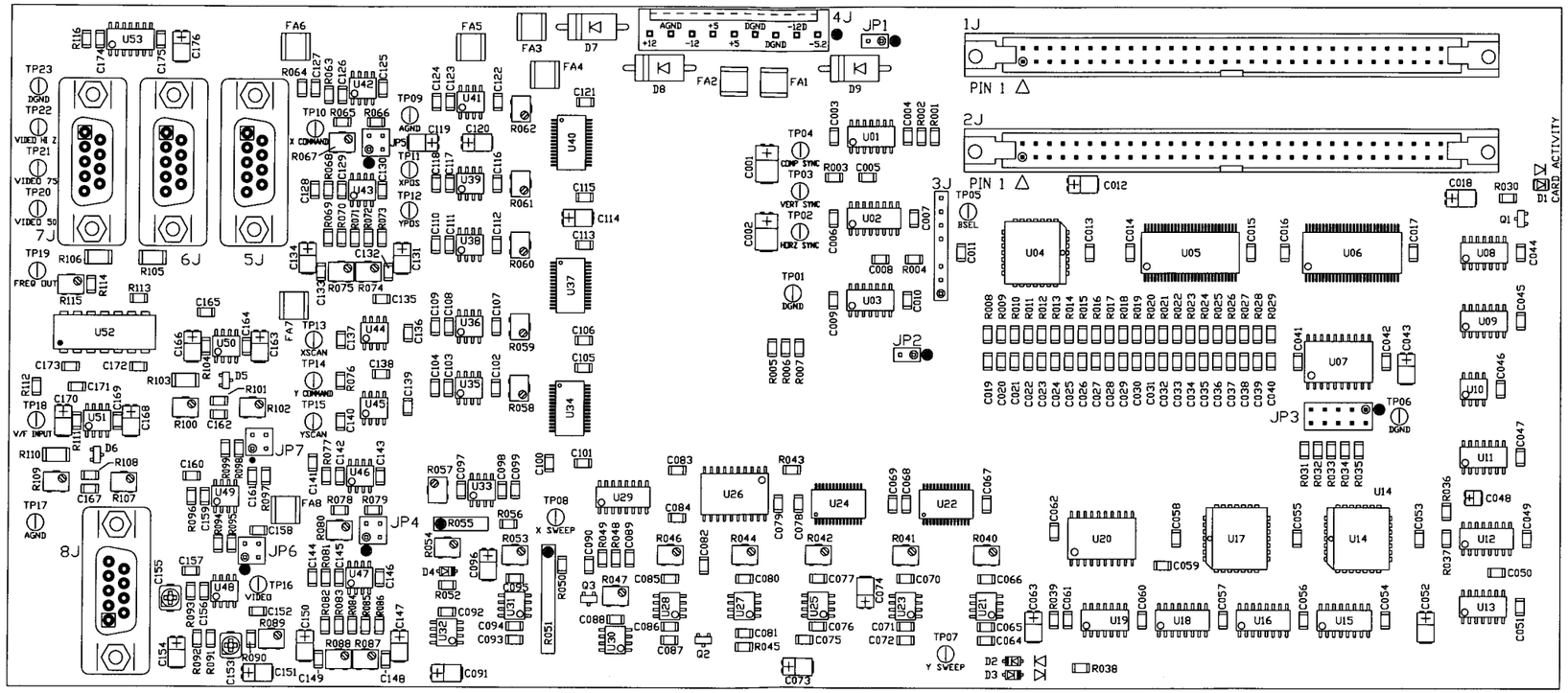

DATE	NO.	REVISION DESCRIPTION	BY	ECN

PIERCE–PACIFIC MFG., INC.

PCMAPII CARD
PRINTED CIRCUIT
LAYOUT

NET WT

LISTED

SCALE NONE | DATE 3-17-01 | DRAWN JPR | APPROVED

D | MAP20100 | –